PECIFIED

RING DIAGRAM OF VARCO DRILLERS CONSOLE

LDMENT USING LOCTITE #454

ENCLOSURE

△4 REPLACE ALL 1 WATT LAMPS.

93987-1 dwg 88,349 10-17-91 7:04a

REVISIONS				
LTR	DESCRIPTION	PREPARED	CHECKED	APVD
-	ACAD RELEASE DEV. RELEASE	3/91		BJK 10/91

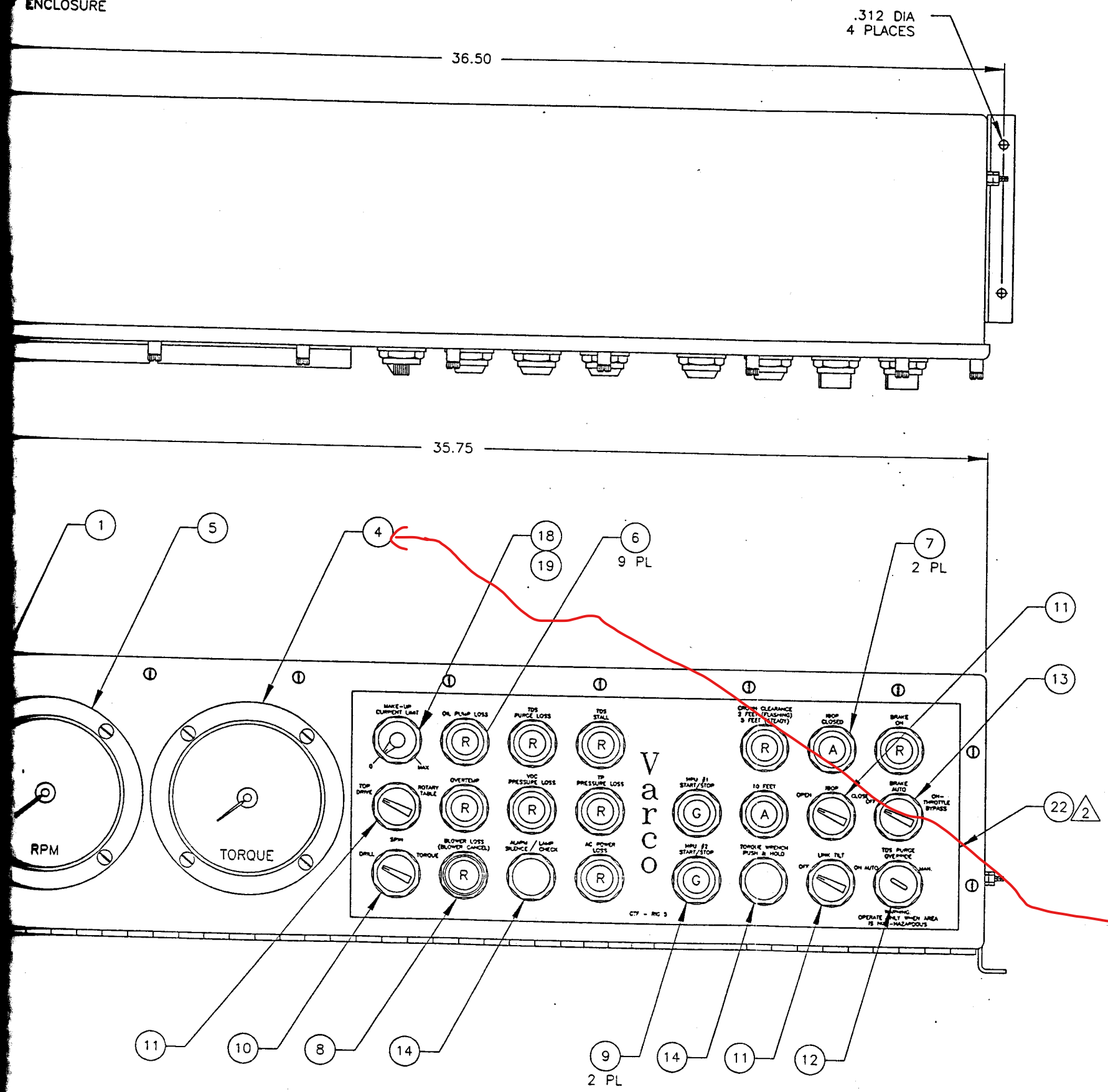

QTY REQD	PART NO.	DESCRIPTION	MATERIAL	ITEM NO.
AR	53200-242	COMPOUND, LOCKING (BLUE)		43
1	52002-12-BR	NIPPLE, PIPE 1/8 NPT X 1 1/2 LG.		42
1 FT	80430	TUBING		41
1	88493	ELBOW, FEMALE		40
1	88491	ELBOW, MALE		39
△3 2	88643-8	HUB, PIPE		38
1	81778	SWITCH, DIFFERENTIAL PRESSURE		37
2	50204-S	NUT, HEX- STD	1/4-20	36
2	55203-S	NUT, HEX- STD	10-32	35
4	50202-S	NUT, HEX- STD	8-32	34
4	50903-S	WASHER, LOCK- REG.	NO. 10	33
2	50902-S	WASHER, LOCK- REG.	NO. 8	32
4	50803-R-S	WASHER, FLAT	NO. 10	31
2	50802-R-S	WASHER, FLAT	NO. 8	30
2	50649-63	SCREW, MACHINE- PAN HD SST	10-32 X .50	29
10	56610-01	TERMINAL, WIRE-SPADE		28
10	78725-05	FERRULE, 12 AWG		27
100	78725-03	FERRULE, 18 AWG		26
10	78725-02	FERRULE, 20 AWG		25
100 FT	56621-18-8	WIRE, STRANDED- HOOK UP		24
10 FT	87975	CABLE, TWISTED PAIR		23
1	93989	NAMEPLATE, VDC		22
1	87124	HORN, 24VDC		21
1	88663	J-BOX, HORN		20
1	81736	POTENTIOMETER		19
1	87708-46	POTENTIOMETER OPERATOR		18
4 FT	84084	SPRIAL WRAP		17
△4 9	87708-44	INDICATING LAMP (2 WATT)		16
				15
2	87708-02	SWITCH, PUSHBUTTON		14
1	87708-57	SWITCH, SEL.- 3 POS. MAINTAINED		13
1	87708-61	SWITCH, SEL.- 2 POS MAINT., KEY		12
3	87708-26	SWITCH, SEL.- 2 POS. MAINTAINED		11
1	87708-33	SWITCH, SEL.- 3 POS. SPRING RTN FROM RIGHT		10
2	87708-16	PUSHBUTTON, ILLUMINATED- GREEN		9
1	87708-14	PUSHBUTTON, ILLUMINATED- RED		8
2	87708-40	INDICATING LIGHT, AMBER		7
9	87708-38	INDICATING LIGHT, RED		6
1	77563	METER, RPM		5
1	77562-2	METER, TORQUE		4
1	87681	TERMINAL BLOCK ASSEMBLY		3
1	88042-6	GASKET, ENCLOSURE		2
1	86735	WELDMENT, ENCLOSURE		1

LIST OF MATERIALS

CRC=	81DD
---	TDCS
NEXT ASSY	PRODUCT
APPLICATION	

UNLESS OTHERWISE SPECIFIED
INTERPRET DIMENSIONS & TOLERANCES PER ANSI Y14.5
INTERPRET ABBREVIATIONS PER ANSI Y1.1
.X±.1 .XX±.03 .XXX±.010
ANGULAR TOLERANCE ±0° 30'
MACHINED SURFACES 250√ MAX
DIMENSIONS ARE IN INCHES
DO NOT SCALE DOCUMENT

APPROVALS		DATE
PREPARED	A.J. PATINO	3/91
CHECKED		
ENGR	J. KELLY	10/91
APPROVED		

THIS DOCUMENT CONTAINS PROPRIETARY INFORMATION, AND SUCH INFORMATION MAY NOT BE DISCLOSED TO OTHERS FOR ANY PURPOSE NOR USED FOR MANUFACTURING PURPOSES WITHOUT WRITTEN PERMISSION FROM BJ SERVICES, INC.

Varco BJ DRILLING SYSTEMS

TITLE ASSEMBLY, VDC-CTF-RIG 5

SIZE D DOCUMENT NO. 93987

SCALE 1/2 WT LB ~ SHEET 1 OF 2